SFP-10G-C(-T)-TAA

10 GIGABIT COPPER RJ45 SFP+ MODULE WITH TAA COMPLIANT

FEATURES

- 10Gbps Link up to 100 Meters with Cat 6a/7 Cable
- IEEE 802.3az Compliant
- SFF-8431 and SFF-8432 MSA Compliant
- Detailed Product Information in EEPROM
- Access to Physical Layer IC via 2-wire Serial Bus
- 12C to MDIO Bridge (IEEE 802.3 Clause 45)
- Hot-Pluggable SFP Footprint
- Compliant with SFP MSA
- Fully Metallic Enclosure for Low EMI
- Compact RJ-45 Connector Assembly
- RoHS Compliant
- +3.3V Single Power Supply
- Temperature Range: 0°C to +70°C & -40°C to +85°C
- Transmitter Disable and Reset Function
- TAA Compliant

INTRODUCTION

Antaira Technologies SFP-10G-C(-T)-TAA SFP transceiver acts as physical layer interface function for 10GBASE-T, 5GBASE-T, 2.5GBASE-T, 1000BASE-T and 100BASE-TX Ethernet with Cat6a or Cat7 twisted-pair cable. The Copper SFP transceiver is designed fully compliant with IEEE 802.3 standard. It connects to the network through an isolated transformer and supports auto-negotiation with any 10G/5G/2.5G/1G/100M bps link partner.

SFP-10G-C(-T)-TAA Copper SFP transceiver features simple application in data center network at 10Gb/s, and allows linking up to 100 meters. It really enables a new dimension of flexibility for Network Equipment designer, and for data center facility planners to optimize capital expense.

SFP-10G-C(-T)-TAA Copper SFP Transceiver provides standard serial ID information compliant with SFP MSA, which can be accessed with address of 0xA0 via the 2-wire serial CMOS EEPROM protocol. The physical IC can also be accessed via 2-wire serial bus at address 0xAC for a write and 0xAD for a read. Detail protocol refers to the “I2C to MDIO Bridge” section.

SPECIFICATIONS

Absolute Maximum Ratings

Parameter	Symbol	Minimum	Maximum	Unit	Note
Storage Temperature	Ts	-40	85	℃	
Storage Humidity	Hs	5	95	%	

Recommended Operating Conditions

Parameter	Symbol	Minimum	Maximum	Unit	Note
Operating Temperature	Tc	-40	85	℃	

Supply Voltage	Vcc	3.1	3.5	V	Typ. 3.3V
Surge Current	Isurge		30	mA	Hot Plug

Cable Length Operating Conditions

Parameter	Symbol	Minimum	Type	Maximum	Unit	Note
10Gbps @100m Cat7/Cat6a	I		520	550	mA	1, 2, 3
10Gbps @30m Cat7/Cat6a	I		420	450	mA	1, 2
5Gbps @100m Cat7/Cat6a	I		520	550	mA	1, 2, 3
2.5Gbps @100m Cat7/Cat6a	I		520	550	mA	1, 2, 3
1Gbps @100m Cat7/Cat6a	I		520	550	mA	1, 2, 3
100Mbps @100m Cat7/Cat6a	I		520	550	mA	1, 2, 3

Notes:

1. -40~85℃, measurement after network link up.
2. Recommend using @ DataCenter switch with air flow/temperature control. Supply current will be 3% more if without air flow.
3. Single 100m cable only.

Electrical Characteristics

Parameter	Symbol	Minimum	Type	Maximum	Unit	Note
Transmitter						
Data Input Differential Voltage	V_{DTX}	180			mV	1
Differential Input Impedance	Z_{TX}		100		Ohm	
Transmitter Disable Input – High	V_{DISH}	2		VccT	V	
Transmitter Disable Input – Low	V_{DISL}	0		0.8	V	
Receiver						
Data Output Differential Voltage	V_{DRX}	350			mV	3
Differential Output Impedance	Z_{RX}		100		Ohm	
LOS Output Voltage – High	V_{SDHL}	2.4		Vcc	V	2
LOS Output Voltage – Low	V_{SDL}	0		0.5	V	2

Notes:

1. Internally AC coupled to the PHY chip.
2. Pull up to VCC with a 4.7K – 10K Ohm resistor on host Board
3. Internally AC coupled, but requires a 100 Ohm differential termination at MAC side.

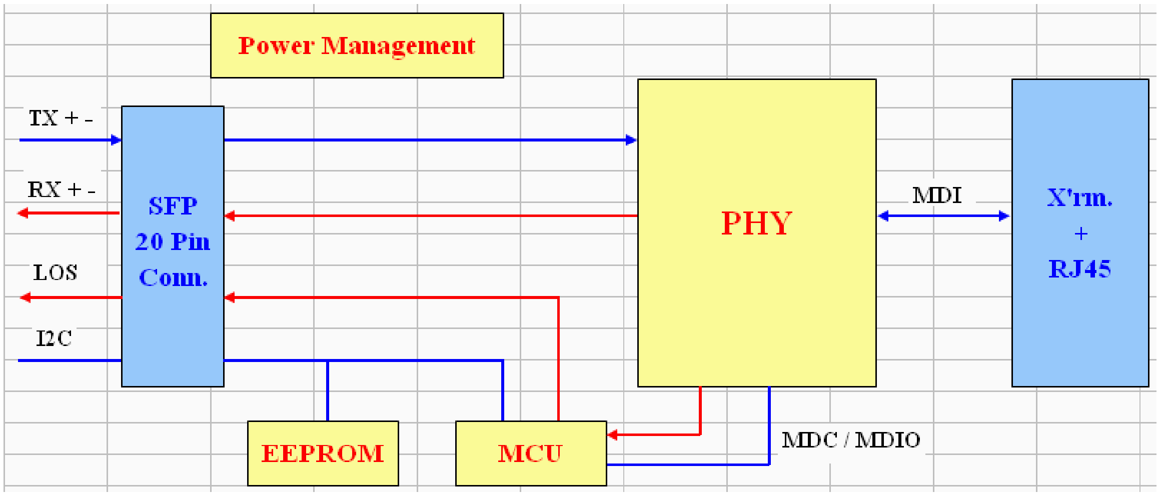

Block Diagram of Transceiver

LOS FUNCTION

The SFP MSA specification defines a pin called LOS to indicate loss of signal to the motherboard. This should be pulled up with a 4.7K to 10K resistor. Pull up voltage between 2.0V and Vcc-T/R+0.3V. When high, this output indicates the link fails. Low indicates normal operation. In the low state, the output will be pulled to <0.8V.

TERMINATION CIRCUITS

Inputs to the transceiver are AC coupled and internally terminated through 50 ohms. These modules can operate with LVPECL or CML logic levels. The input signal must have at least an 180mV differential peak-to-peak signal swing. Output from the receiver section of the module is also AC coupled and is expected to drive a 50 ohm load. Different termination strategies may be required depending on the particular Serializer/Deserializer chip set used. The transceiver is designed with AC coupled data inputs and outputs provide the following advantages: Close positioning of SERDES with respect to transceiver; allows for shorter line lengths and at high speeds reduces EMI. Minimize the number of external components. Internal termination reduces the potential for un-terminated stubs which would otherwise increase jitter and reduce transmission margin.

Subsequently, this affords the customer the ability to optimally locate the SERDES as close to the transceiver as possible and save valuable real estate. At 10Gbps rates this can provide a significant advantage resulting in better transmission performance and accordingly better signal integrity.

POWER COUPLING

A suggested layout for power and ground connections is given in Figure 1 below. Connections are made via separate voltage and ground planes. The mounting posts are at case ground and should not be connected to circuit ground. The ferrite bead should provide a real impedance of 50 to 100 ohms at 100 to 1000 MHz. Bypass capacitors should be placed as close to the 20 pin connector as possible.

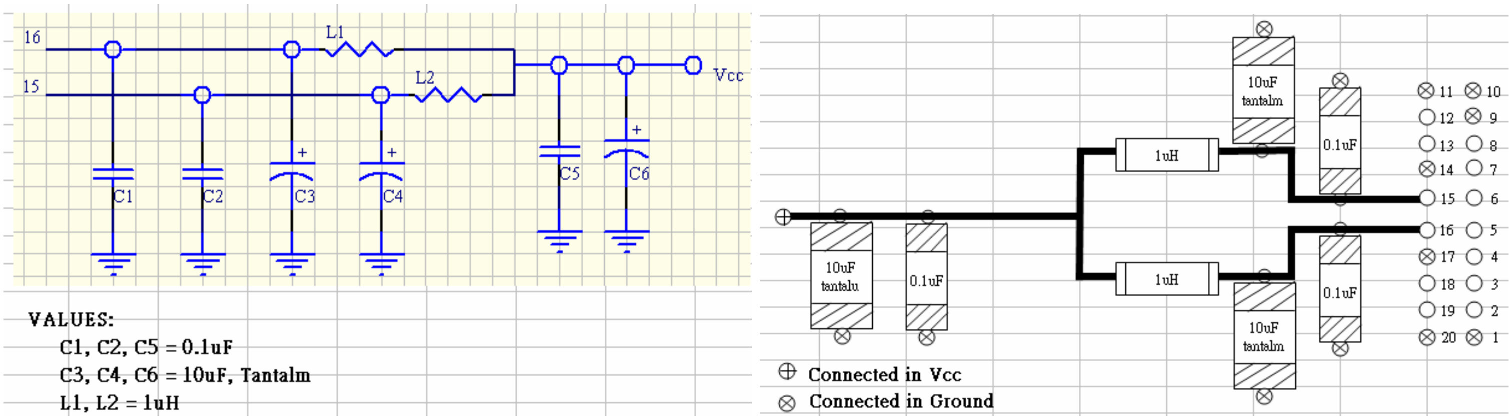

Figure 1 – Suggested Power Coupling

SERIAL COMMUNICATION PROTOCOL

SFP-10G-C(-T)-TAA supports the 2-wire serial communication protocol defined in the SFP MSA. These SFP use a 128 byte EEPROM with an address of 0xA0. The physical layer IC can also be accessed via the 2-wire serial bus at address 0xAC/0xAD. See “I2C to MDIO Bridge” section.

EEPROM SERIAL ID MEMORY CONTENTS

Accessing Serial ID Memory uses the 2-wire address 10100000 (A0H). Memory Contents of Serial ID are shown below.

Address	Size (Bytes)	Name of Field	Hex	Description
0	1	Identifier	03	SFP or SFP+
1	1	Ext. Identifier	04	GBIC/SFP Function is Defined by Two-wire Interface ID Only
2	1	Connector	22	RJ45
3-10	8	Transceiver	XX XX XX XX XX XX	Transceiver Code
11	1	Encoding	00	
12	1	BR (Nominal)	64	10Gbps
13	1	Rate Identifier	00	Unspecified
14	1	Length (SMFm) - km	00	N/A
15	1	Length (SMF)	00	N/A
16	1	Length (50µm)	00	N/A
17	1	Length (62.5µm)	00	N/A
18	1	Length (cable)	64	100 (units of meters)
19	1	Length (OM3)	00	N/A
20-35	16	Antaira	XX XX XX XX XX XX XX 20 20 20 20 20 20 20 20 20	Antaira (ASCII)
36	1	Transceiver	IC	Unallocated
37-39	3	Antaira OUI	XX XX XX	Antaira OUI
40-55	16	Antaira PN	XX XX XX XX XX XX XX XX XX XX XX XX XX XX XX XX	Transceiver Part Number
56-59	4	Antaira Rev	XX XX XX XX	Antaira Rev
60-61	2	Wavelength	00	0nm
62	1	Unallocated	00	Unallocated
63	1	CC_BASE	Check Sum (Variable)	Check Code for Base ID Fields
64-65	2	Options	00 02	RATE_SELECT Functionality is not Implemented
66	1	BR	00	max
67	1	BR	00	min
68-83	16	Antaira SN	41 34 32 30 33 30 30 34 20 20 20 20 20 20 20 20	Serial Number of Transceiver (ASCII). For example "A4203004".
84-91	8	Date Code	XX XX XX XX XX XX XX XX	Manufacture Date Code
92	1	Diagnostic Monitoring Type	00	N/A
93	1	Enhanced Options	00	N/A
94	1	SFF-8472 Compliance	00	Digital Diagnostic Function Not Included or Undefined
95	1	CC_EXT	Check Sum (Variable)	Check Sum for Extended ID Field

96-127	32	Antaira	Read Only	Information

Note: The "XX" byte should be filled in according to the practical case. For more information, please refer to the related document of SFP Multi-Source Agreement (MSA).

12C to MDIO BRIDGE

SFP-10G-C-T-TAA has MCU inside to bridge host I2C to communicate with PHY MDIO interface. The I2C at slave address 0xAC for a write and 0xAD for a read.

MDIO Write Sequence:	6 bytes 12C frame are required 1st byte: 0xAC (8bits) 2nd byte: 0b'000 + DEVAD (5bits) 3~4 bytes: Register Address (16bits) 5~6 bytes: Write Data (16bits)
MDIO Read Sequence:	7 bytes 12C frame are required 1st byte: 0xAC (8bits) 2nd byte: 0b'001 + DEVAD (5bits) 3~4 bytes: Register Address (16bits) Delay >1 mS (Important: for MCU access PHY through MDIO) 5th byte: 0xAD (8bits) 6~7 bytes: Read Data (16bits)

Example:

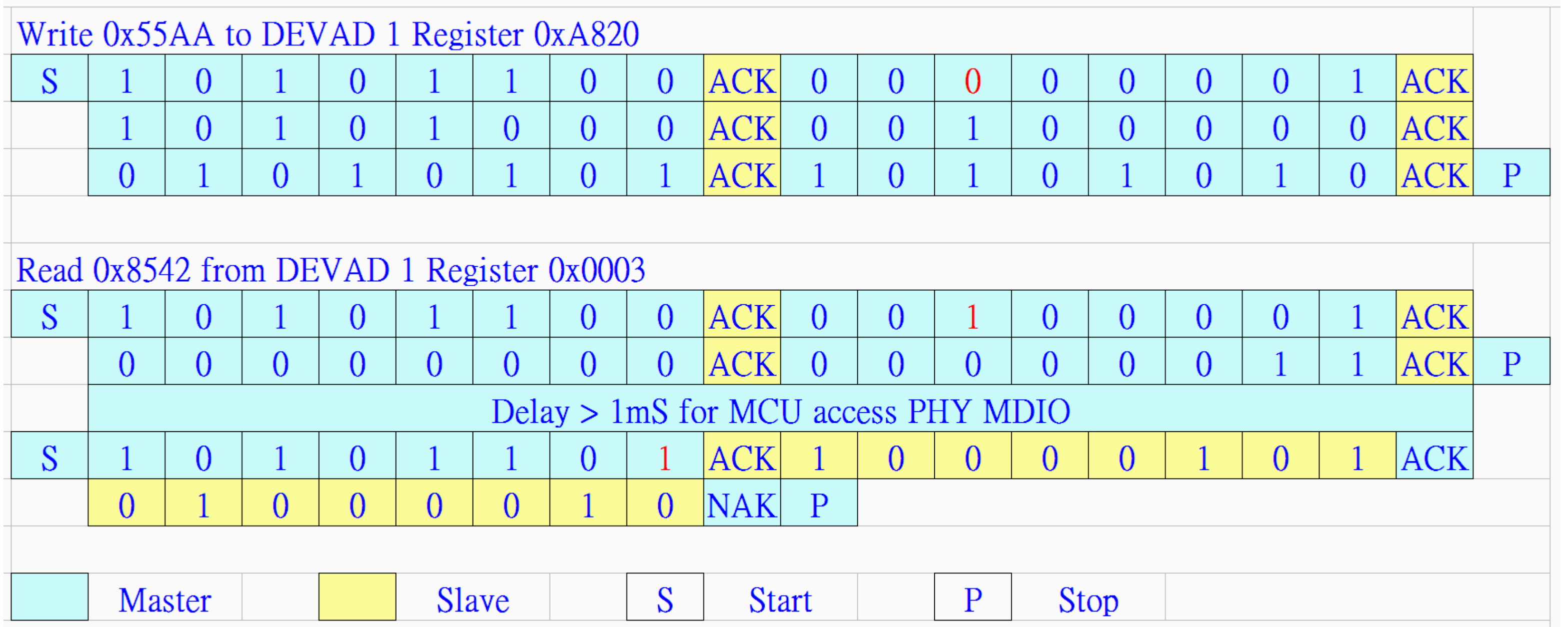

Write 0x55AA to DEVAD 1 Register 0xA820																			
S	1	0	1	0	1	1	0	0	ACK	0	0	0	0	0	0	0	1	ACK	
	1	0	1	0	1	0	0	0	ACK	0	0	1	0	0	0	0	0	ACK	
	0	1	0	1	0	1	0	1	ACK	1	0	1	0	1	0	1	0	ACK	P
Read 0x8542 from DEVAD 1 Register 0x0003																			
S	1	0	1	0	1	1	0	0	ACK	0	0	1	0	0	0	0	1	ACK	
	0	0	0	0	0	0	0	0	ACK	0	0	0	0	0	0	1	1	ACK	P
	Delay > 1mS for MCU access PHY MDIO																		
S	1	0	1	0	1	1	0	1	ACK	1	0	0	0	0	1	0	1	ACK	
	0	1	0	0	0	0	1	0	NAK	P									
🟦	Master		🟨	Slave			S	Start			P	Stop							

CONNECTION DIAGRAM

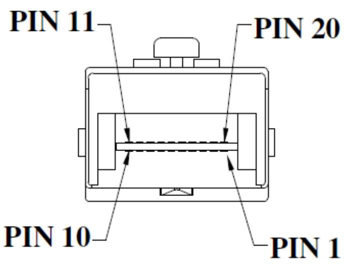

Pin-Out Connection Diagram

Pin Number	Signal Name	Function	Notes
1	VeeT	Transmitter Ground	VeeT and VeeR are connected in SFP

2	TX_FAULT	Transmitter Fault Indication	Not Implemented. Tied to VeeT in SFP.
3	TX_DISABLE	Transmitter Disable	Disabled on High or Open, Enabled on Low. (2)
4	MOD DEF (2)	Module Definition 2	Data Line for Serial ID
5	MOD DEF (1)	Module Definition 1	Clock Line for Serial ID
6	MOD DEF (0)	Module Definition 0	Tied to Vee in SFP
7	RATE SELECT	Not Implemented	Not Implemented
8	LOS	Loss of Signal	See LOS Option
9	VeeR	Receiver Ground	VeeT and VeeR are connected in SFP
10	VeeR	Receiver Ground	VeeT and VeeR are connected in SFP
11	VeeR	Receiver Ground	VeeT and VeeR are connected in SFP
12	RD-	Inverted Received Data Out	AC coupled 100 ohm differential high speed data lines
13	RD+	Non-Inverted Received Data Out	AC coupled 100 ohm differential high speed data lines
14	VeeR	Receiver Ground	VeeT and VeeR are connected in SFP
15	VccR	Receiver Power	VeeT and VeeR are connected in SFP
16	VccT	Transmitter Power	VeeT and VeeR are connected in SFP
17	VeeT	Transmitter Ground	VeeT and VeeR are connected in SFP
18	TD+	Non-Inverted Data In	AC coupled 100 ohm differential high speed data lines
19	TD-	Inverted Data In	AC coupled 100 ohm differential high speed data lines
20	VeeT	Transmitter Ground	VeeT and VeeR are connected in SFP

Notes:

1. TX Fault is not used and is always tied to ground
2. Also used for PHY chip reset by "Falling Edge" of TX_DISABLE
3. Mod-Def 0, 1, 2. These are the module definition pins. They should be pulled up with a 4.7-10 K resistor on the host board to a supply less than VCCT + 0.3 V or VCCR + 0.3 V.
4. RD-/+: These are the differential receiver outputs. They are ac coupled 100 Ohm differential lines which should be terminated with 100 ohm differential at the user SerDes. The ac coupling is done inside the module and is thus not required on the host board. The voltage swing levels are compatible with CML and LVPECL voltage swings.
5. VCCR and VCCT are the receiver and transmitter power supplies. They are defined as 3.3 V ± 5% at the SFP connector pin.
6. TD-/+: These are the differential transmitter inputs. They are ac coupled differential lines with 100 Ohm differential termination inside the module. The ac coupling is done inside the module and is thus not required on the host board. The input levels are compatible with CML and LVPECL voltage swings.

DIMENSIONS

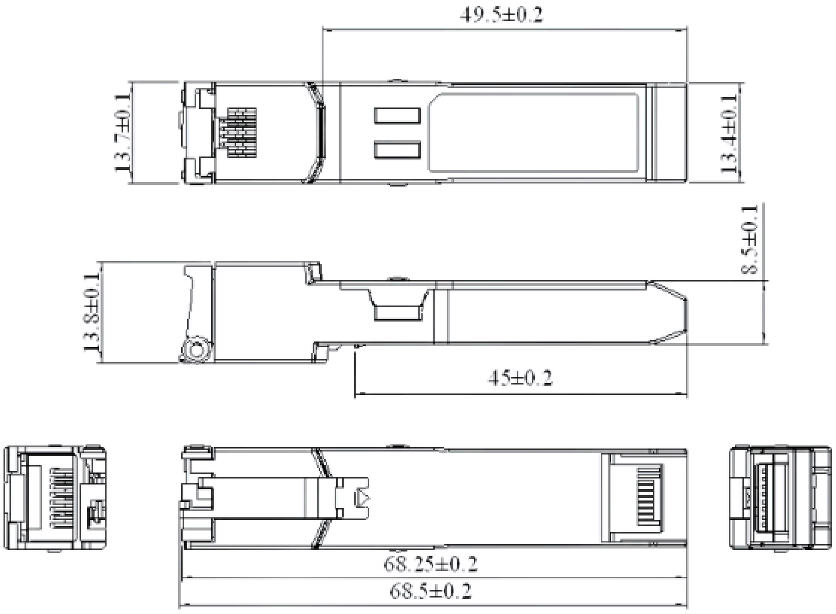

MATING OF SFP TRANSCEIVER TO SFP HOST BOARD CONNECTOR

The pads on the PCB of the SFP transceiver shall be designed for a sequenced mating as follows: First mate: Ground contacts. Second mate: Power contacts. Third mate: Signal contacts The SFP MSA specification for a typical contact pad plating for the PCB is 0.38 micrometers minimum hard gold over 1.27 micrometers minimum thick nickel. To ensure the long term reliability performance after a minimum of 50 insertion removal cycles, the contact plating of the transceiver is 0.762 micron (30 micro-inches) over 3.81 micron (150 micro-inches) of Ni on Cu contact pads.

RJ45 CONNECTOR

RJ45 connector shall support shielded and unshielded cables. Also, the connector is mechanically robust enough and designed to prevent loss of link, when the cable is positioned or moves in different angles. The connector shall pass the “wiggle” RJ45 connector operational stress test. During the test, after the cable is plugged in, the cable is moved in a circle to cover all 360 deg in the vertical plane, while the data traffic is on. There shall be no link or data loss.

ORDERING INFORMATION

SFP Models

Part Number	Description
SFP-10G-C-TAA	10/100/1G/2.5G/5G/10G Copper Ethernet SFP+ Transceiver, 0~70°C, with TAA Compliant
SFP-10G-C-T-TAA	10/100/1G/2.5G/5G/10G Copper Ethernet SFP+ Transceiver, -40~85°C, with TAA Compliant

© Antaira Technologies, LLC. All rights reserved. 202505
Specifications are subject to change without notice and without incurring any obligation.